Deadbreak Tee Connector 630A
93-EE9X5-4-Exp-A-1/C Series

Tee Connector : 24 kV – 125 kV BIL
Conforms to : IEC 502-4, VDE 0278

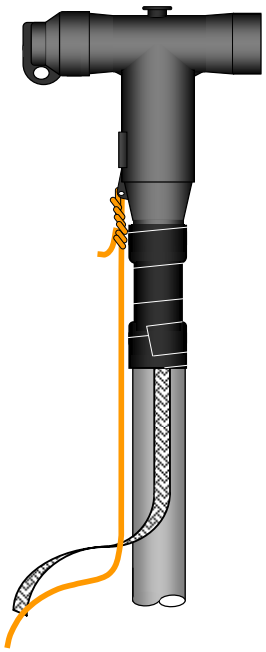

Instructions

Kit		Insulation OD	Cross Section
Fore Tee	Sub Tee	(mm)	(mm2)
93-EE905-4/35-Exp-A	93-EE905-4/35-Exp-B	17.5--20.0	35
93-EE905-4-Exp-A	93-EE905-4-Exp-B	19.5--22.0	50
93-EE915-4-Exp-A	93-EE915-4-Exp-B	21.5--23.5	70
93-EE925-4-Exp-A	93-EE925-4-Exp-B	23.5--26.5	95
93-EE935-4-Exp-A	93-EE935-4-Exp-B	23.5--26.5	120
93-EE945-4-Exp-A	93-EE945-4-Exp-B	26.0--28.0	150
93-EE955-4-Exp-A	93-EE955-4-Exp-B	27.5--30.5	185
93-EE965-4-Exp-A	93-EE965-4-Exp-B	30.5--34.5	240
93-EE975-4-Exp-A	93-EE975-4-Exp-B	30.5--34.5	300
93-EE985-4-E	93-EE985-4-E	34.0--37.5	400

Note:
Final determining factor for sizing is the cable insulation OD. range.
Before Starting
Check to ensure that the kit you are going to use fits the cable.
Read and follow the steps in this installation instruction.

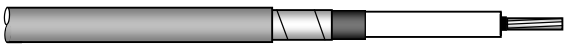

1/C Metallic Shielded Cable

3M™ Dead-Break Tee Connector Termination 1/C – 24 kV – 630A

93-EE9X5-4-Exp-A-1/C Series

A. Prepare Cable

1. Lay cable into position with cut end centered on equipment bushing. Clean cable end outer sheath (jacket) for ½ meter.

2. Prepare cable end according to dimensions shown in Figure 1. Slightly taper edge of the phase insulation (① Figure 1).

Figure 1

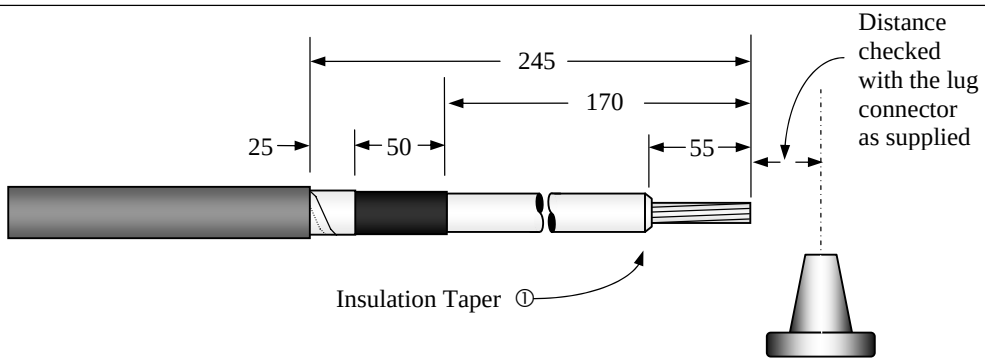

B. Attach Metallic Shield Grounding Braid

1. Expand ground braid end for 50 mm (① Figure 2).

Figure 2

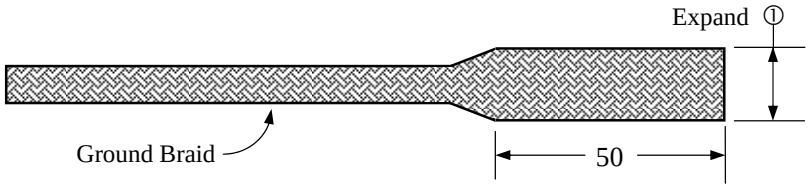

2. Wrap a single mastic seal strip band around cable jacket 5 mm from cut edge (① Figure 3).

3. Position expanded ground braid end over cable metallic shield and mastic band (② Figure 3). Secure braid to shielding using supplied constant force spring (③ Figure 3).

4. Wrap a second mastic seal strip band over ground braid and previously-applied mastic band (④, Figure 3)

Figure 3

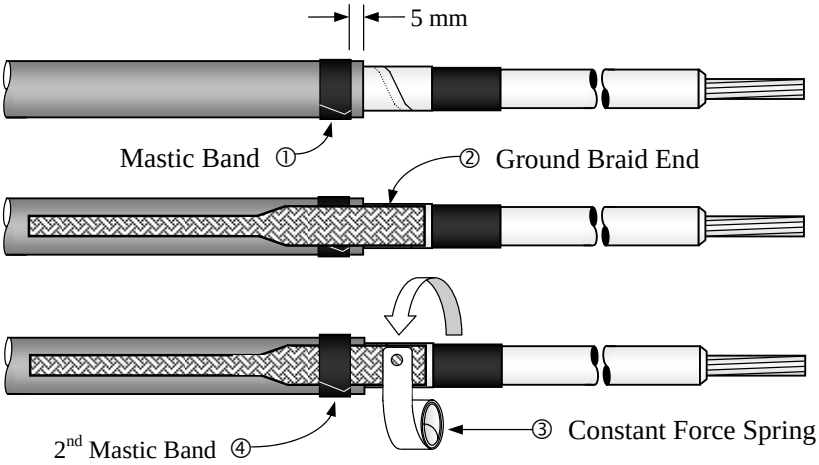

5. Apply two highly-stretched half-lapped layers vinyl tape over spring and sealing mastic (① Figure 4).

   Caution: Do not extend vinyl tape wrapping more than 10 mm onto cable semi-conductive screen.

Figure 4

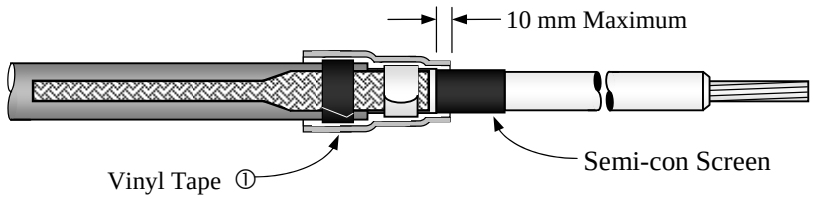

Figure 5

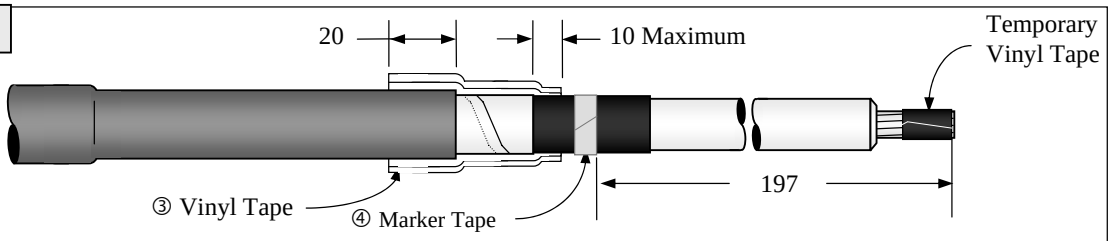

6. Temporarily apply two layers of vinyl tape at the end of conductor. Place a marker tape on semi-con (197 mm from cable core end - ④ Figure 5). Thoroughly clean cable phase insulation using solvent wipe from supplied cable preparation kit.

7. Clean the outer surface of the insulation and inner surface of the cable adapter. Apply a thin layer of silicone grease to the cable insulation and the inside bore of the cable adapter (Figure 6). Slide the cable adapter in one sequence completely onto the cable insulation, small end first, until the tube end aligns with the marker tape (④ Figure 6).

Figure 6

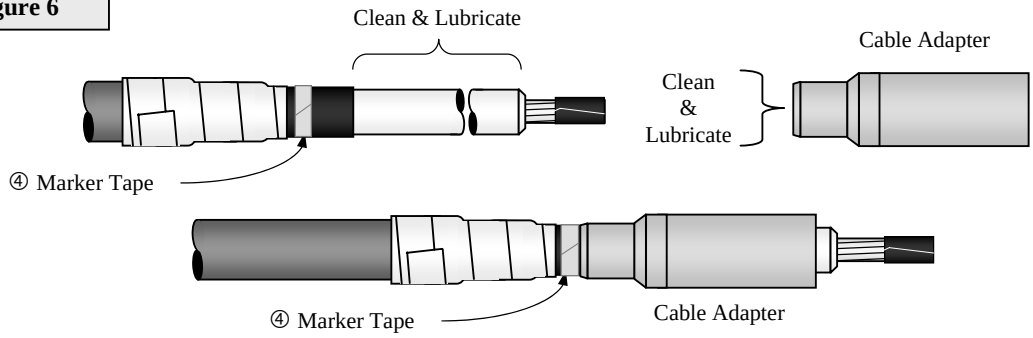

8. Install Terminal Lug
   (a) Remove the protection (temporary vinyl) tape from the conductor.
   (b) Push on the cable lug onto the conductor until it stops and rotate it to distribute the inhibitor. Ensure that the flat surface of the lug (lug hole) faces the equipment bushing thread hole or splice connecting plug interface surface as shown (⑤ Figure 7).
   (c) Crimp the lug connector with appropriate die and compression tool, starting at the upper shoulder as shown (Figure 7). Rotate the crimping tool 90 degrees with each successive crimp.
   (d) Remove any sharp edges. Clean and degrease the lug and the outer surface of the cable adapter from any excess oxide inhibitor that may have come out of the terminal lug barrel.

Figure 7

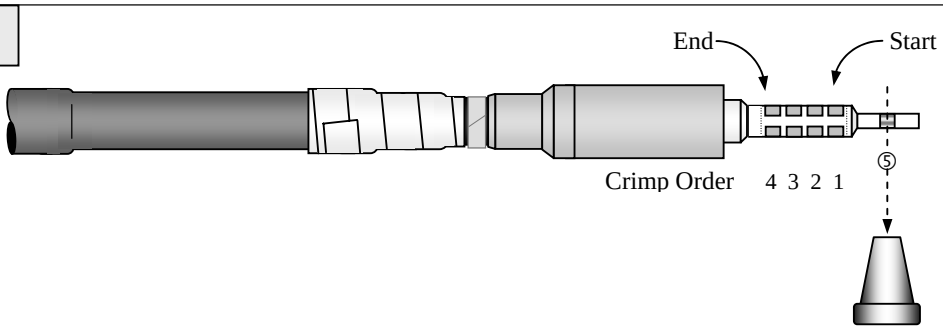

Install Shielded Fore Connector (Tee Body) and Connect Tee Body to Equipment Bushing

1. Apply a thin layer of grease onto the outer surface of the cable adapter	**Figure 8** 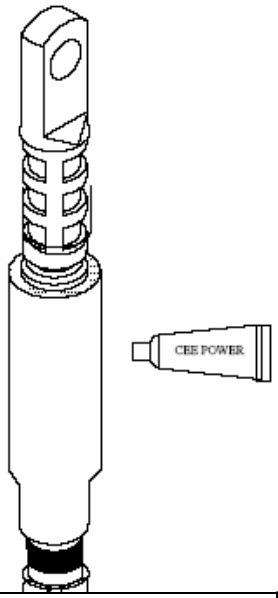
2. Abrade and clean the contact ring of the bushing thead from residuals such as resin or varnish if any. Insert the theaded stud into the bushing and tighten it	**Figure 9** 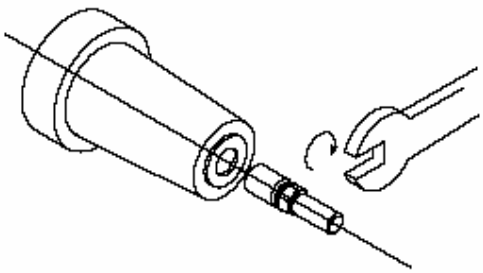

3. Clean and lubricate the conical surface of the bushing. Clean the bottom and front end of the fore-connector body. Apply a thin layer of grease onto the inner surface at a length of approximately 50mm

Figure 10

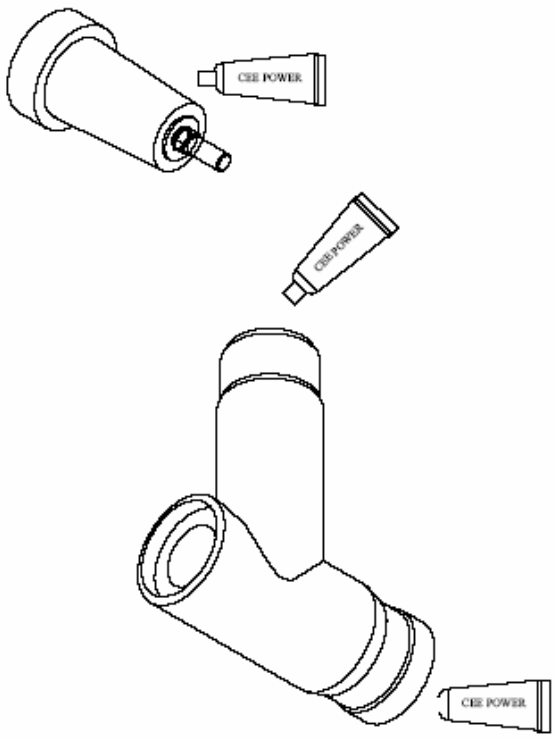

4. Push connector body with no interruption onto the cable adapter and hold it. Continue immediately with the next step.

Figure 11

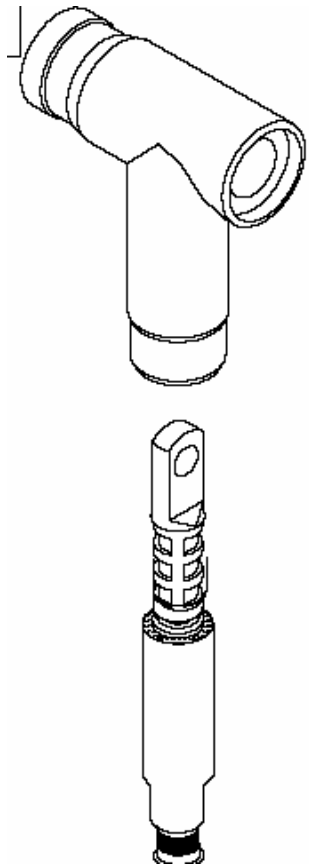

5. Align the eye of cable lug with the thread stud and push the connector onto the bushing

Figure 12

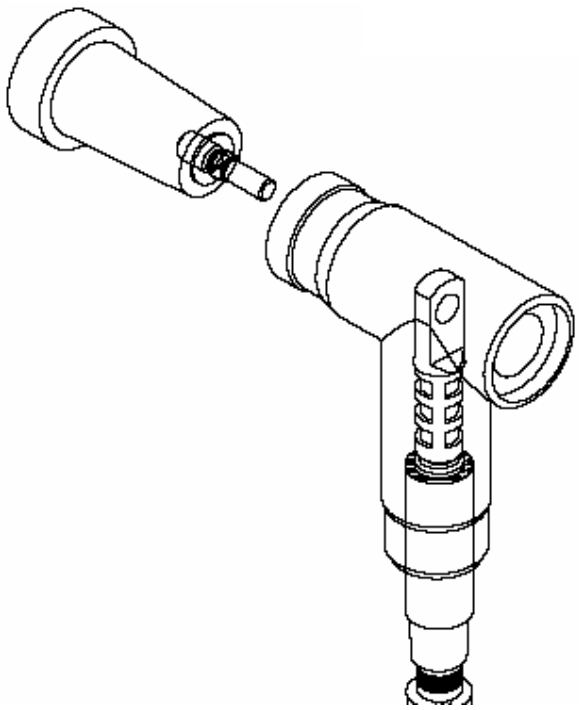

6. Insert the washer, spring washer and nut in order and tighten the nut onto the stud at a torque of 30Nm using sleeve wrench. Clean and lubricate the inner surface at the end of the connector, place the back plug and tighten it

Figure 13

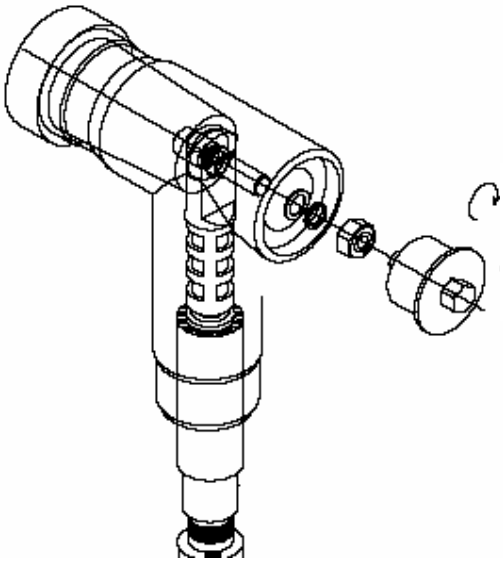

7. Cover the back plug with the covering cap. Connect the earthing wire to system ground

Figure 14

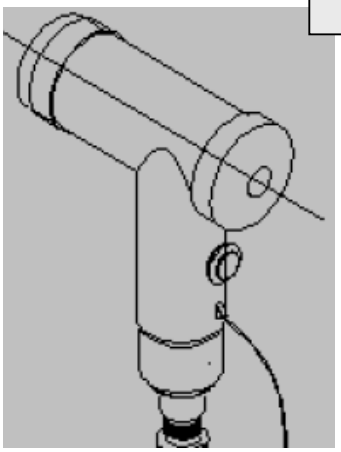

Sealing and System Grounding

For all fore Tee-connectors already installed:

1. Seal base of each tee body to cable phase re-jacketing tube using at least two half-lapped layers of vinyl tape. Extend vinyl tape wrapping 25 mm onto base of tee body.
2. Insert copper drain wire through grounding ear of tee body as shown (⑤ Figure 15). Twist each wire to make secure tee body connection.
3. Connect all drain wires and shield grounding braids to system ground (earth) as shown (⑥ Figure 15).

Figure 15

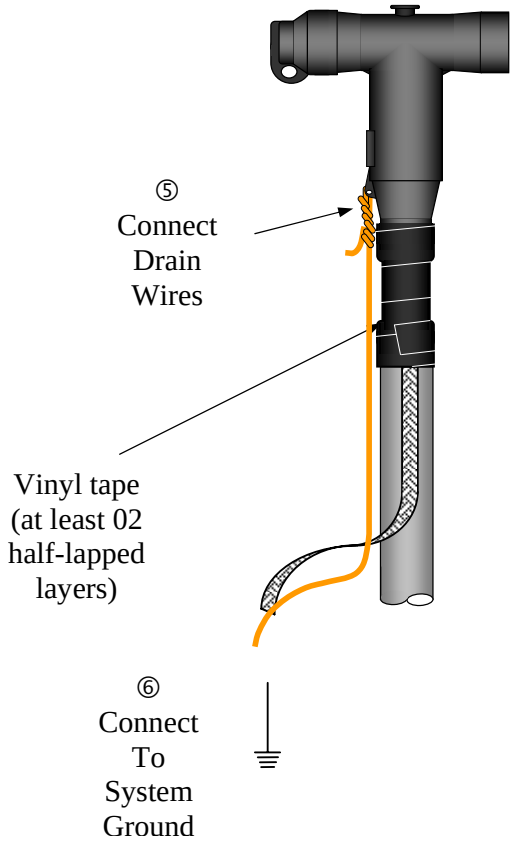

Important Notice

All statements, technical information and recommendations related to the Seller's products are based on information believed to be reliable, but the accuracy or completeness thereof is not guaranteed. Before utilizing the product, the user should determine the suitability of the product for its intended use. The user assumes all risks and liability whatsoever in connection with such use.

All statements or recommendations of the seller which are not contained in the Seller's current publications shall have no force of effect unless contained in an agreement signed by an authorized officer of the Seller. The statements contained herein are made in lieu of all warranties expressed or implied, including but not limited to the implied warranties of merchantability and fitness for a particular purpose, which warranties are here, disclaimed.

SELLER SHALL NOT BE LIABLE TO THE USER OR ANY OTHER PERSON UNDER ANY LEGAL THEORY, INCLUDING, BUT NOT LIMITED TO NEGLIGENCE OR STRICT LIABILITY, FOR ANY INJURY OR FOR ANY DIRECT OR CONSEQUENTIAL DAMAGES SUSTAINED OR INCURRED BY REASON OF THE USE OF ANY OF THE SELLER'S PRODUCTS.

3M

Electrical Products Division